EDP BA BM

Set of protection without support rail

Technical Data Sheet

socla.com

SOCLA
A WATTS Brand

Description

The BA BM backflow preventer protects the drinking water network by interrupting the continuity of the supply, emptying and evacuating to waste in case of danger of water being turned back into the main pipeline. The set of protection(not assembed) is composed by :

- an isolating valve
- a filter with drain cock
- a backflow preventer type BABM
- an isolating valve

It is designed to realize a set of protection BA type as described in EN 1717.

EDP BA BM - Set of protection without support rail

DN		PFA in bar	Ref	Weight Kg
"	mm			
1/2	15	10	**149B70012**	1,8
3/4	20	10	**149B70013**	2,2
1	25	10	**149B70014**	4,2
1 1/4	32	10	**149B70015**	5
1 1/2	40	10	**149B70016**	9,6
2	50	10	**149B70017**	11,5

Technical features	
Operating temperature	Maxi. 65 °C
Permissible operating pressure(PFA) in water	10 bar
Connection	Female/female connection
Mediums	Drinking water

Nomenclature and materials

N°	Description	Materials
1	Ball valve	Brass chrome
2	Rinsing valve filter	Brass
3	Backflow preventer	Brass DZR

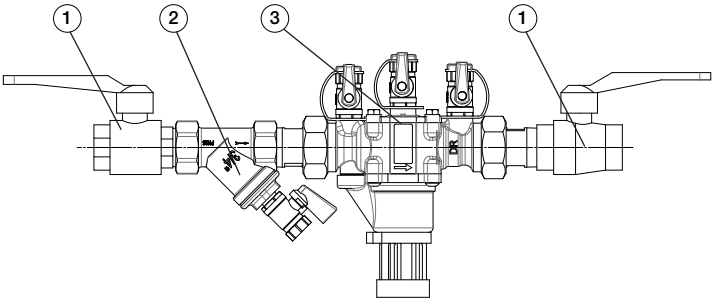

Approvals

Approvals BA BM:

ACS NF BELGAQUA UBA UREA ERITA SVGW SSIGE SINTEF DVGW UNI VA Kiwa UK-REG 4

International Construction Standards:
EN 1717 - EN12729
Thread connection according to EN ISO 228-1 / ISO 7.1

Application

Designed to protect drinking water supply networks against the backflow of risk fluids up to category 4 according to EN1717.

The device is designed to prevent any backflow of polluted water into the drinking water supply network as a result of back pressure or back siphonage when the pressure upstream of the device is lower than the pressure downstream of it.

For systems liable to generate pollution risks such as:
- Professional networks: industrial facilities, surface treatment, chemical industry
- Sanitary networks: hospitals, laboratories, dialysis centers, water treatment
- Technical networks: heating, air conditioning, irrigation, water dispensers, sprinklers

Installation

Directions for installation:
- total accessibility
- non-submersible installation
- purge carefully all air from the installation(non polluted atmosphere)
- the discharge valve must be able to cope with the discharge flow rate
- protection against frost or extreme temperatures
- in the case of an upstream diversion in the area right in front of the RPZ, it is necessary to install a check valve between the diversion and the RPZ.
- always manipulate the upstream valve slowly.

The protection device must be installed by a qualified technician.

Maintenance

• Testing: In accordance with national statutory regulations, BA backflow preventers must be regularly inspected(once a year in most countries) by an authorized maintenance technician.

An annual functional test of the backflow preventer must be done with a test kit with pressure gauge and hoses. This test equipment must be checked once every two years at least.

• Repair kits: Repair kits are available and make it possible to replace the specific defective part on the BA backflow preventer. The kit consists of: one upstream valve assembly(1), one downstream valve assembly(2), one relief valve assembly(3).

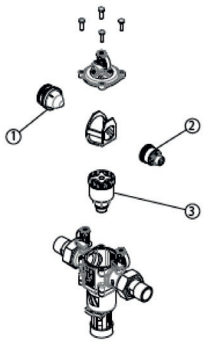

Ref.	DN		Ref.
Backflow preventers	"	mm	Repair kit
149B70012	1/2	15	**149B1391**
149B70013	3/4	20	**149B1391**
149B70014	1	25	**149B1393**
149B70015	1 1/4	32	**149B1393**
149B70016	1 1/2	40	**149B1395**
149B70017	2	50	**149B1395**

Operation

Mode of operation:

• Continuous curve: Totally opened valve

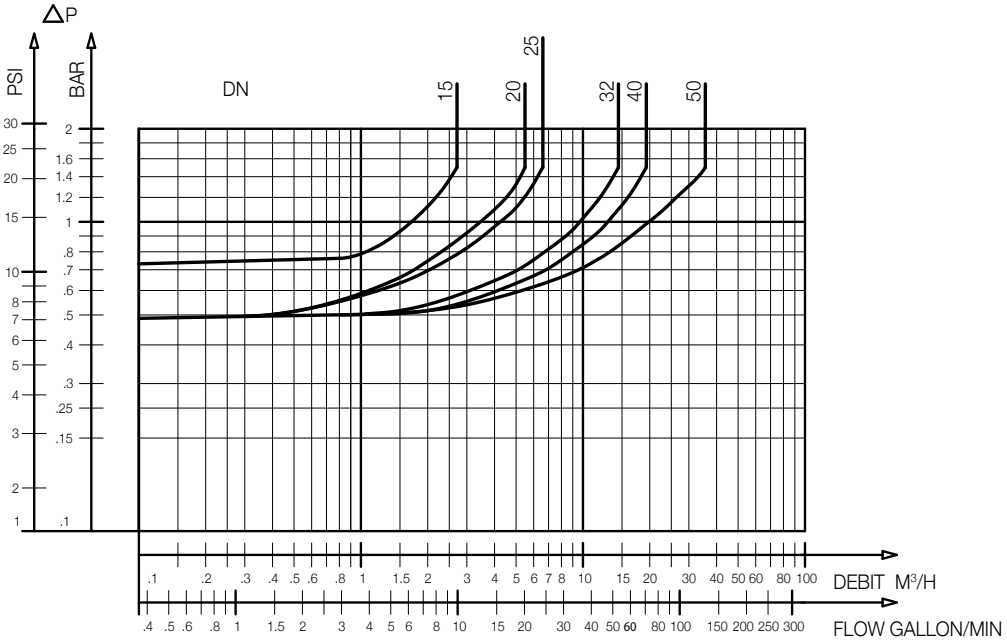

BABM WITHOUT SUPPORT - Headloss chart

Sizing

DN	A	B	C	D
mm	mm	mm	mm	mm
15	355	90	65,5	103
20	362	90	65,5	103
25	455	115	82	156
32	495	115	82	156
40	610	150	101	202,5
50	677	180	101	202,5

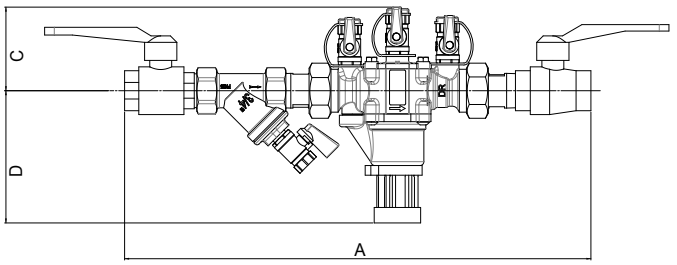

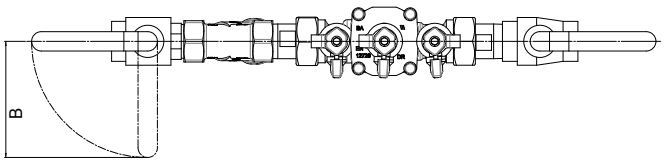

SET OF PROTECTION WITHOUT SUPPORT RAIL

The descriptions and photographs contained in this product specification sheet are supplied by way of information only and are not binding.
Socla reserves the right to carry out any technical and design improvements to its products without prior notice. Warranty : All sales and contracts for sale are expressly conditioned on the buyer's assent to Socla terms and conditions found on its website at www.socla.com. Socla hereby objects to any term, different from or additional to Socla terms, contained in any buyer communication in any form, unless agreed to in a writing signed by an officer of Socla.

A WATTS Brand

Socla sas
365 rue du Lieutenant Putier • 71530 Virey-Le-Grand • France
Tel. +33 03 85 97 42 00 • Fax +33 03 85 97 42 42
contact@wattswater.com • www.socla.com
ISO 9001 version 2015 / ISO 18001

© 2026 Socla